N4
On Board Computer

jff – 7 June 1997

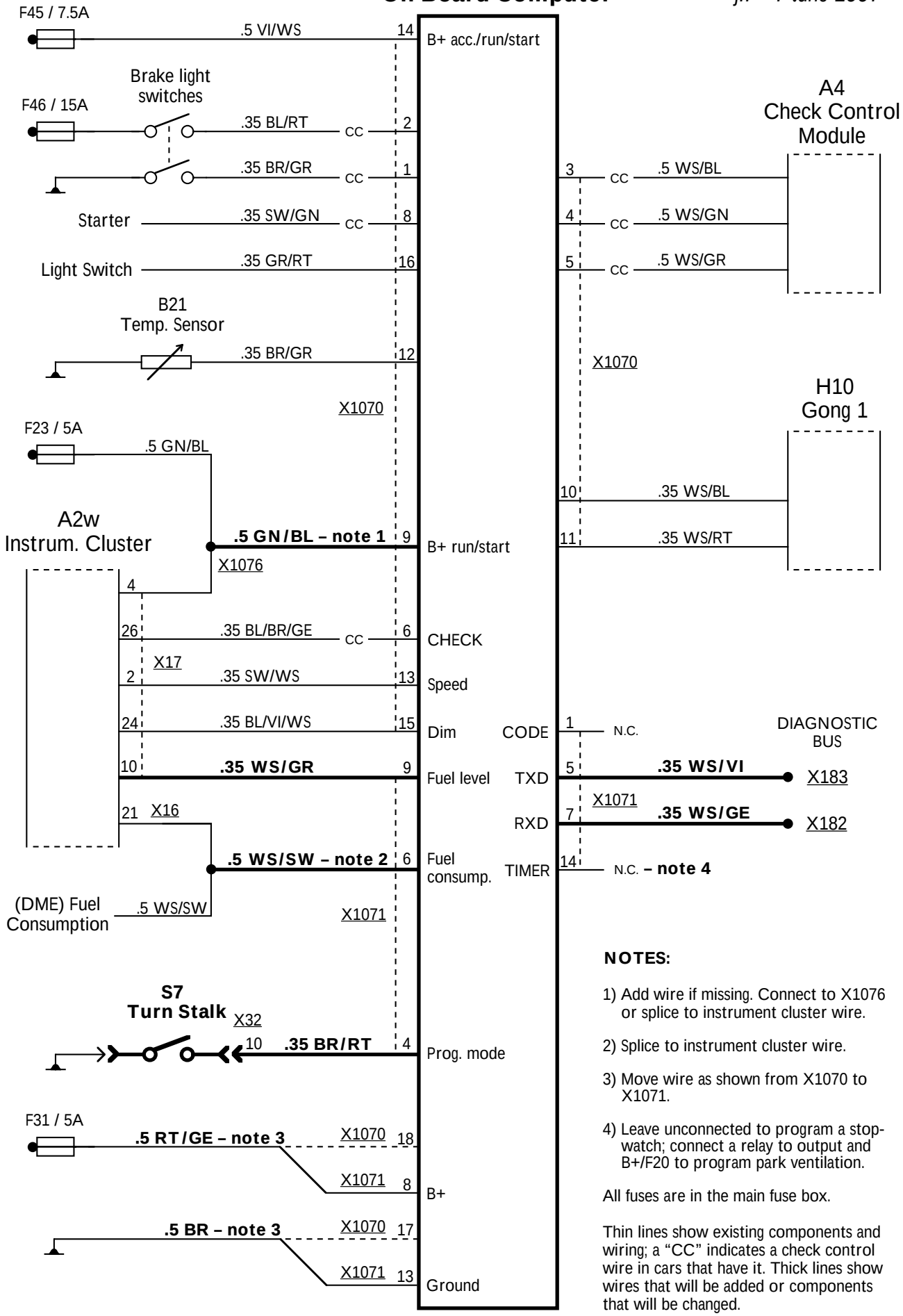

NOTES:

1) Add wire if missing. Connect to X1076 or splice to instrument cluster wire.

2) Splice to instrument cluster wire.

3) Move wire as shown from X1070 to X1071.

4) Leave unconnected to program a stop-watch; connect a relay to output and B+/F20 to program park ventilation.

All fuses are in the main fuse box.

Thin lines show existing components and wiring; a “CC” indicates a check control wire in cars that have it. Thick lines show wires that will be added or components that will be changed.